Natural wood
Made to last

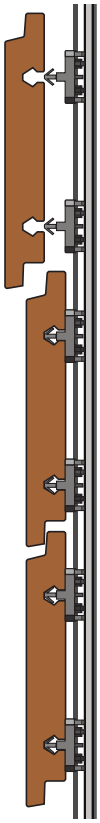

Installation Guide

Click-in Cladding™ System (CCS)

08/28/2024

This item has been electronically signed and sealed by Gary Hartman using an SHA authentication code.

Printed copies of this document are not considered signed and sealed. To verify electronic copies, forward them to ghartman@icc-es.org.

Please read in full prior to using Click-in Cladding™ System, and if you have any questions, e-mail: info@kebony.us or call: +1 833.795.8660

www.kebony.us
@kebonyusa

Guidelines

Transportation & Storage

- When transported, the rails should be secured in their original packaging and should be stored indoors or in a covered environment before installation
- No heavy objects should be stored on top of the rails to avoid possible damage and/or bending of the rails
- Kebony should not be exposed directly to the elements before installation. Kebony should be kept enclosed in its original packaging or re-wrapped if previously opened. Ideally, Kebony should also be stored indoors or under cover

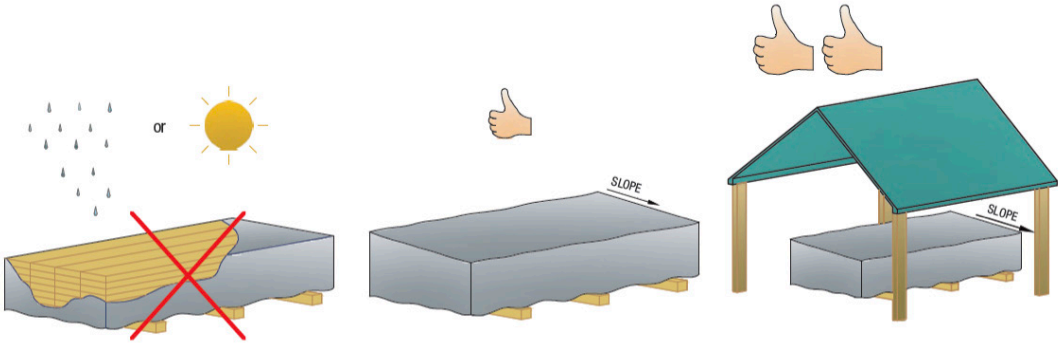

Applications

- The rails can be used for horizontal, vertical, or diagonal cladding
- The rails should only be placed onto a flat, even, and hard surface
- Only use compatible wood cladding as specified by Kebony
- For a traditional stud framed or post framed house: the rails must be secured where the studs or purlins are located and in between the studs into the wood sheathing

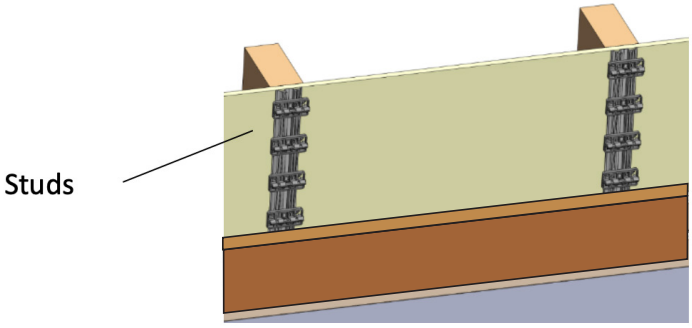

Safety guidelines

- Wear protective clothing and safety equipment such as safety glasses, gloves, long sleeves, and a mask, particularly when cutting aluminum
- The installer is responsible for identifying and following all building codes and construction safety practices
- Grad™ nor Kebony accept any liability or responsibility for the improper installation of this product
- The Click-in Cladding™ System may not be suitable for every application, and it is the sole responsibility of the installer to be sure that rails and cladding are fit for the intended use. Because all installations are unique, it is also the installer's responsibility to determine specific requirements for each cladding application
- Grad™ and Kebony recommend that all applications be reviewed by a licensed architect, engineer or local building official before installation

YOUR CHECKLIST

- The wall should be straight, leveled, and undamaged
- Each rail must be fixed onto a flat and hard surface (stud or wall) using appropriate fasteners. Fasteners shall be selected by the customer to be suitable for the surface onto which the rails are secured
- Example fasteners for wood framing & sheathing, and CMU or concrete installations are detailed elsewhere in this document
- It is the customer's responsibility to verify they have the right rails to match the boards they want to use and to make sure the rails they intend to use meet all their requirements
- Only Kebony cladding boards that have been grooved to Grad's specifications can be used with Grad® Mini Rail
- The building design should address the need to protect against water getting behind the wood. For example, roof overhangs, flashing, etc.

- Installers must use flashing and weather barriers installed in compliance with local codes and manufacturer requirements, especially in the following proper locations:
    - Openings (e.g. doors and windows)
    - Wall/ceiling junction
    - Chimneys
    - Transition between another type of cladding surface

RECOMMENDED TOOLS & EQUIPMENT

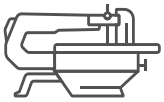

Scroll saw

Miter saw

• 72-tooth or greater saw blade with carbide teeth

Saw blade suitable for cutting aluminum

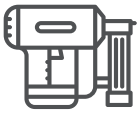

Pneumatic nailer or electric drill

Compressor with adequate capacity to supply air for pneumatic tools

Manual Level

Laser Level

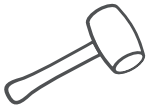

Rubber Mallet

Hammer

Pliers

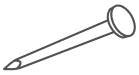

304 or 316 Stainless Steel ring-shanked nails (for pneumatic nailer) or screws

PPE including goggles and gloves

Disclaimer

Although this installation guide was designed with as much care as possible, in accordance with current practices for installing wood cladding, we are not liable for any errors or omissions that may arise from the use of this guide. All users of this guide fully assume all risks and responsibilities associated with it.

This guide presents the best manufacturer installation practices. However, it is the installer's duty and responsibility to take all available documentation and professional best practices into account prior to completing work to ensure proper installation and the validity of the product warranties.

The technical drawings in this guide do not show all construction details to meet requirements of codes and standards.

Finally, do not hesitate to contact Kebony should you have any questions arise regarding specific applications of the Click-in Cladding™ System that are not covered in this guide.

Main products

Grad™ Mini Rail

Grad™ Mini Rail (#G2171)
1x6 w/Narrow Gap (~5/32")
Dimensions:
1890 x 63 x 23.5 mm
74.4" x 2.5" x 0.93"

Grad™ Mini Rail (#G2172)
1x6 w/Wide Gap (~17/64")
Dimensions:
1932 x 63 x 23.5 mm
76.1" x 2.5" x 0.93"

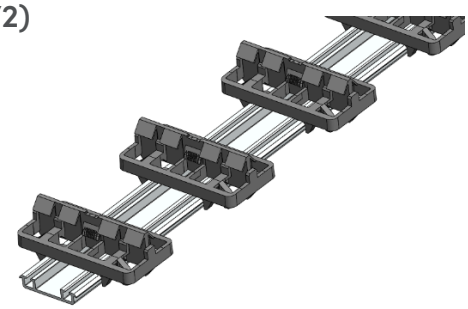

Grad™ Mini Rail (#G2173)
1x8 w/Narrow Gap (~1/4")
Dimensions:
1818 x 63 x 23.5 mm
71.6" x 2.5" x 0.93"

Grad™ Mini Rail (#G2174)
1x8 w/Wide Gap (~3/8")
Dimensions:
1848 x 63 x 23.5 mm
72.8" x 2.5" x 0.93"

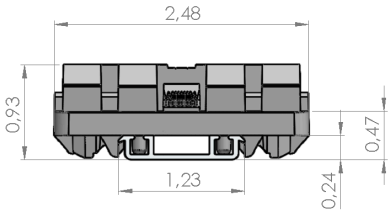

Kebony Cladding Boards

1x6 Clear Cladding Board (#2682)

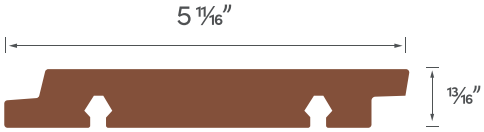

Lengths: 10', 12', 14', 16'

1x8 Clear Cladding Board (#2683)

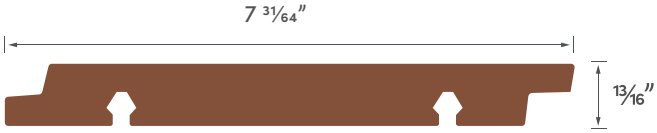

Lengths: 10', 12', 14', 16'

Accessories

Spacing Template

One included in each box

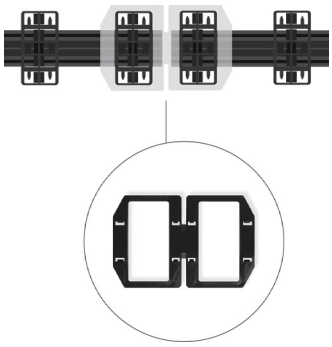

Riser Support (#G1486)

Sold separately

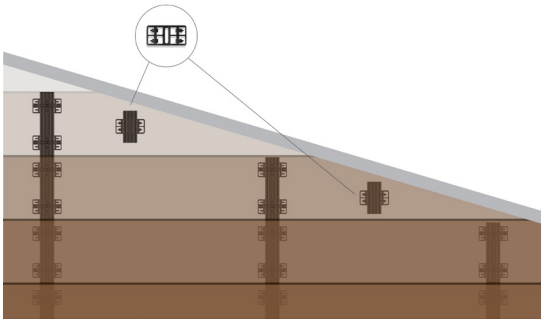

Unboxing the rails

Each box contains 24 rails. There is one spacing template supplied per box. The spacing template will be secured to one of the rails. Take care to identify it, remove it and set it aside in a safe place as you will need it for the installation.

Standard Configurations

For horizontal CCS installations, the rails must be placed vertically

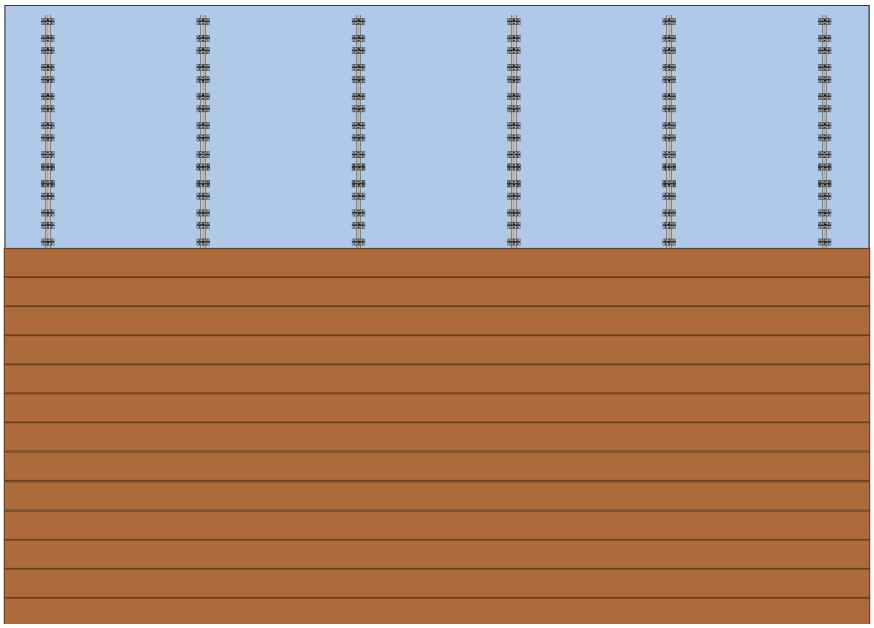

For vertical CCS installations, the rails must be placed horizontally

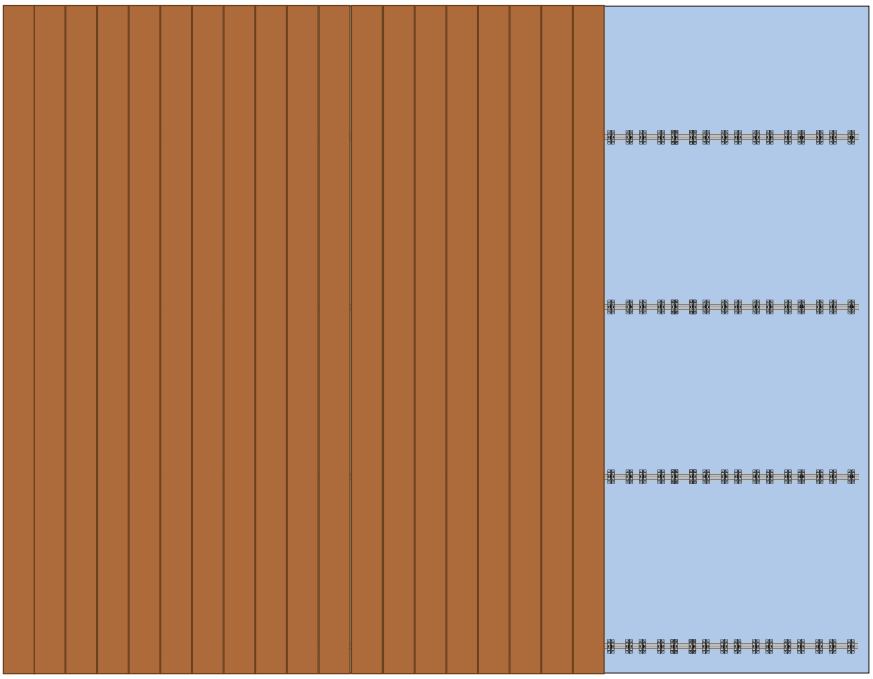

For diagonal CCS installations, the rails must be placed diagonally

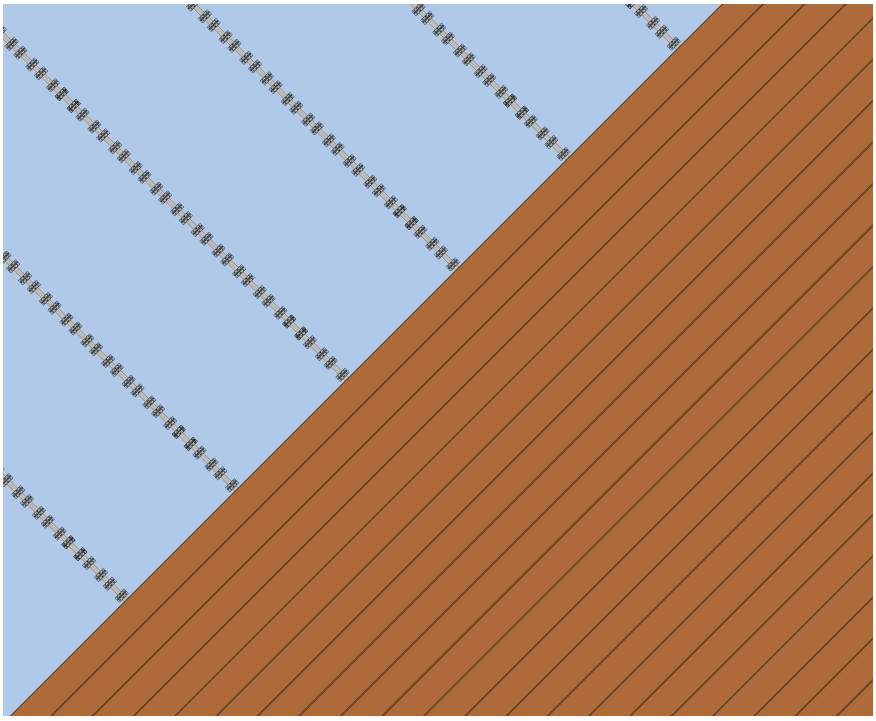

Coverage

Grad™ Mini Rails (Narrow or Wide Gap)

24 rails per Box
1x6 Mini Rail Coverage: Approximately 190 sf/box (16" OC spacing), and 285 sf/box (24" OC spacing)

1x8 Mini Rail Coverage: Approximately 180 sf/box (16" OC spacing), and 275 sf/box (24" OC spacing)

1x6 Clear Cladding Board

1 SF = 2.2 LF

1x8 Clear Cladding Board

1 SF = 1.6 LF

Tips: how and where to cut the rails

1. The rails may be cut to length.
2. Cut the rails to match the required length using an appropriate saw blade.
3. Always cut the rails in between two pairs of clips, making sure there are enough clips to attach the boards properly.
4. If there is a clip where the cut needs to be, remove the clip with pliers. **DO NOT CUT THROUGH THE CLIPS.**

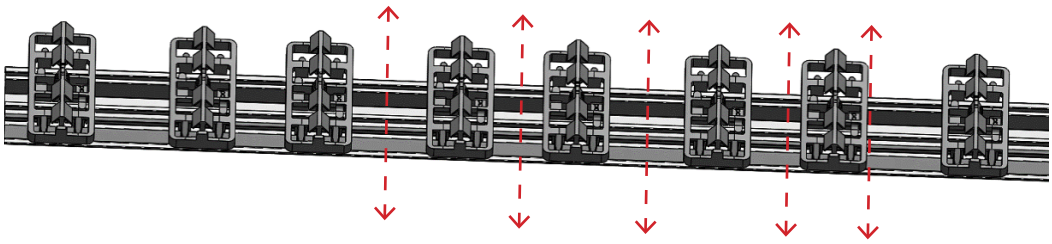

Tips: how to position one rail after another with the Spacing Template

Because of the natural expansion of aluminum, it is important to leave a gap between two inline rails.

The Spacing Template helps to quickly align the rails, and ensures that the correct distance is maintained between the clips.

The Spacing Template should not be fixed with screws or other fasteners. Simply use the Spacing Template as a temporary guide to position the rails properly. Once the rail location is secured in place, remove the Spacing Template and move onto the next pair of rails and align them with the same Spacing Template.

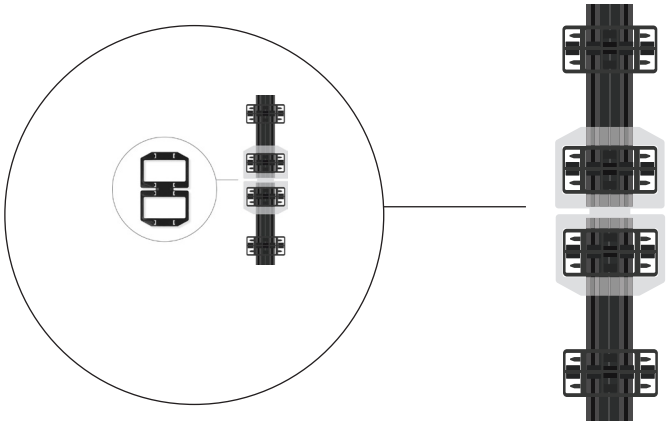

1. Do not secure the Spacing Template with screws or other fasteners.
2. Make sure the first rail is properly fastened and correctly oriented horizontally, vertically, or diagonally.
3. Place the second rail inline after the first one.
4. Position with the Spacing Template as indicated above.
5. Use a level to make sure the second rail is straight and secure it to the wall.
6. Remove the Spacing Template, and re-use it for all inline rails.

Tips: how to measure rail spans

Rail spans are measured between the center of each rail, e.g. with a 24" cc span:

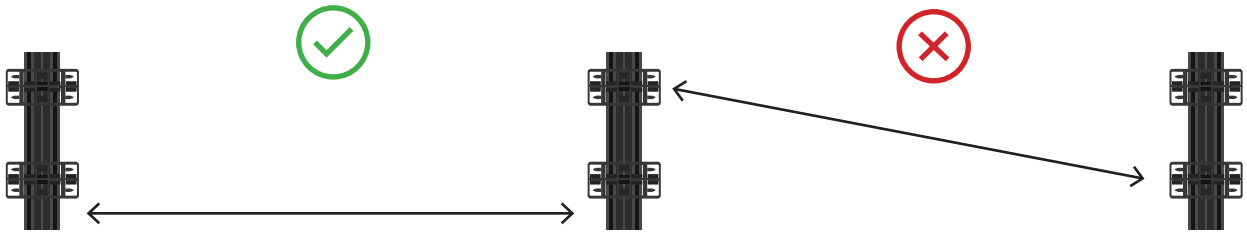

Grad™ Mini Rail: Securing the rails

Typical Fastening Scenarios:

- Positioning the rails
  - Make sure the rail is leveled and mounted to a hard, flat surface
  - Use 2 fasteners to secure the rail into its level position initially. We suggest that these initial fasteners be placed far apart
  - Complete rail installation with additional fasteners at 10-17 inch intervals or as otherwise specified in the subsections below
- Nails directly into wood studs and sheathing using a pneumatic nail gun
- Self-tapping screws through aluminum rails into wood studs and sheathing
- Wood screws through pre-drilled aluminum rails into wood studs and sheathing
- Concrete anchors into CMU or concrete
- Rails can be shimmed up to a maximum of ¼"
- Contact us regarding other configurations

- **Nails directly into wood studs and sheathing**
  - With Pneumatic Nail Gun: Use stainless steel (304 or 316) ring-shanked nails
    - The selection of the stainless grade should be made based on specific site conditions. e.g. use of marine grade 316 SS is recommended in proximity to saltwater
  - General Nail Spec: 15° Wire Coil, Full Round Head, Ring-Shank Siding Nail - 2-1/2" long (or longer depending on wall construction)

- Sample nails:
  - Simpson Strong-Tie
  - 15° Wire Coil, Full Round Head, Ring-Shank Siding Nail - 2-1/2" long
  - T13A250SNJ - Type 316 Stainless Steel - 1800 pcs
  - S13A250SNBP - Type 304 Stainless Steel - 900 pcs
  - S13A250SNC - Type 304 Stainless Steel - 3600 pcs
  - https://www.strongtie.com/sidingfencingtrimnails_collatednails/sn15cra_cnail/p/15-wire-coil-full-round-head-ring-shank-siding-nail#ProductDetails

Nails directly into wood studs and sheathing using a pneumatic nail gun.

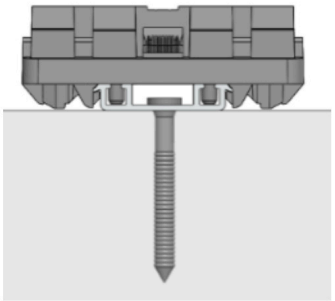

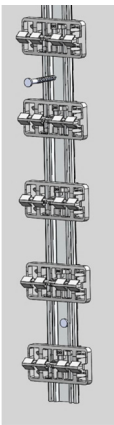

Use 304 or 316 stainless steel ring-shanked nails as specified above.

- **Self-tapping screws through aluminum rails into wood studs and sheathing**
  - Installer to source Stainless Steel fasteners
    - The selection of the stainless grade should be made based on specific site conditions. e.g. use of marine grade 316 SS is recommended in proximity to saltwater

- **Wood screws through pre-drilled aluminum rails into wood studs and sheathing**
  - Pre-drill the rails for the corresponding screw head size
  - Sample Screw:
    - Simpson Deck-Drive™ DWP WOOD SS Screw
    - T08162WPB
    - #8 x 1-5/8"
    - https://www.strongtie.com/deckdrive_exteriorwoodscrews/dwp_screw/p/deck-drive-dwp-wood-ss-screw
      - The selection of the stainless grade should be made based on specific site conditions. e.g. use of marine grade 316 SS is recommended in proximity to saltwater

Wood screws through aluminum rails into wood studs and sheathing.

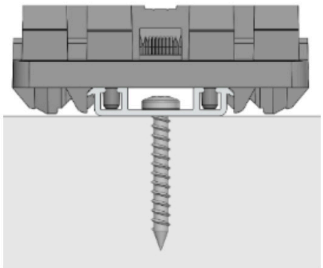

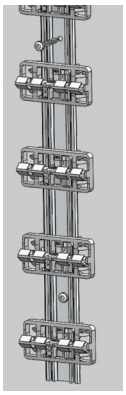

Use 304 or 316 stainless steel fasteners based on site specific conditions such as proximity to saltwater.

- **Concrete anchors into CMU or concrete**
  - **Follow these instructions and use these parts if you wish to comply with the corresponding ICC Product Listing.**
  - ¼" x 2 ¼" Tapcon anchors
  - Blue Climaseal Hex Head
    - Part No. 3157407
  - Drill bit for the above as per Tapcon recommendations/requirements
  - See the below section ***Using Set Screws or Adhesive to Secure Boards from Shifting*** for specific instructions when using concrete anchors in compliance with the ICC Product Listing

  - Pre-drill 5 holes in rails for ¼" Tapcon anchors
    - For ICC Product Listing compliance, the CMU wall surface should be covered with a 1/4" base coat of ASTM C926 compliant stucco
    - The five holes should be set at a maximum of 20" apart
    - For ICC Product Listing compliance space the Tapcon fasteners no more than 14" apart
    - Ensure that there is an anchor at the outer edge of each end of the rail
    - Space the rails at 16" O.C. for ICC Product Listing compliance
    - Place the rail on the CMU wall and mark off the drill locations
    - Pre-drill the marked locations on the CMU as per the ¼" Tapcon instructions
  - Install rails onto the wall using the ¼"x 2-¼" hex head Tapcon anchors specified above while following both this guide and the Tapcon instructions
  - Shim to a max height of ¼"
  - Ensure that there is something placed on the wall to break the direct contact between the wall and the rail such as a G-Tape. This will avoid the interaction of the metal and concrete

Using Set Screws or Adhesive to Secure Boards from Shifting

Installing Set Screws into boards:
To help ensure that the boards do not shift it's important to either (i) install a set screw for the boards, or (ii) apply an adhesive to two sets of clips. Please note that using an adhesive tends to be quicker and less labor intensive.

Installing set screws: This is typically done by face fastening towards the end of the board. We recommended the use of the Pro Plug® System together with a Grad™ Riser Support on a Grad Rail section. Details on using Riser Supports are detailed elsewhere in this document. Remember to order Riser Supports and Pro Plugs for your project.

- In a horizontal orientation, the set screw can be placed at either end of each board.
    - When it's a single horizontal board, place a single set screw at either end of the board.
    - When more than one board, place one screw at each end of the entire run of boards.
- In a vertical orientation, one set screw at the bottom of the lowest board is sufficient, even for an inline multi-board run.
- For compliance with the ICC Product Listing when installing into CMU/Concrete, you must use the adhesive below instead of set screws.

Position the set screws at least 1" (25 mm) from the side of the board and at least 1" (25 mm) from the end of the board.

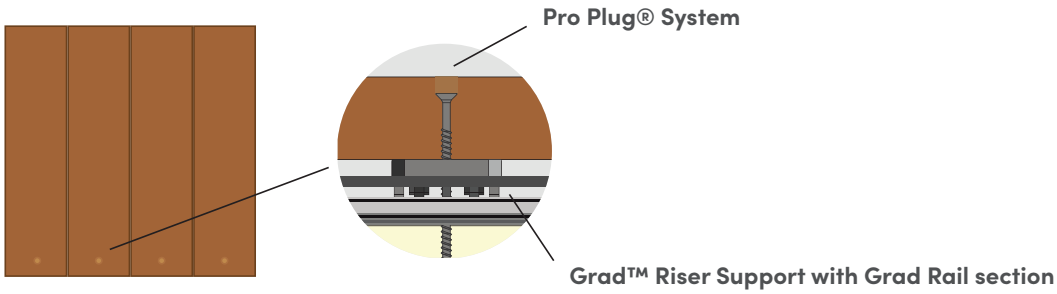

Applying an Adhesive: This method can be used for any application, but should always be used into concrete/CMU installation.
Use Loctite PUR construction adhesive:

- LOCTITE PL Premium 8x Fast Grab Brown Polyurethane Interior/Exterior Construction Adhesive - Sample Link

Install Wood, gluing at two sets of clips:

- Cut wood to the desired length
    - For horizonatal board installation, locate the rail and two pairs of clips (4 clips in total) closest to the midpoint.
    - For vertical board installation, locate the two pairs of clips one and two above the bottom set (the second and third set of clips above the bottom).
- Apply glue to those two pairs of clips (4 clips in total) as per the below image
- Locate the board grooves properly on the clips then firmly press and click into place
- Adjust and finalize board position before the adhesive sets

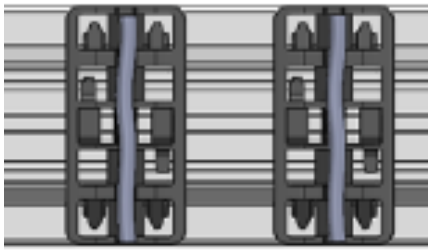

Horizontal Cladding

1. All rails are symmetrical and it does not matter which end you start with.
2. The rails do not need to be pre-drilled if using a pneumatic nail gun or stainless steel self-tapping screws suitable for aluminum and anchoring into wood.
3. Measure the wall height: Use full-length rails whenever possible and only cut the rails to length when necessary, using the appropriate tools.
4. Always cut the rails between two clips when possible. Do not cut through the clips. Remove the clip(s) with pliers and then cut the aluminum rail.
5. With a laser level or a string, set a reference line along the wall to ensure the clips are aligned.
6. Kebony boards should be placed 12" above grade.
7. Starting at one end of the wall, position the first rail at a maximum of 4" away from the end of the wall.
8. Install rails directly onto studs.

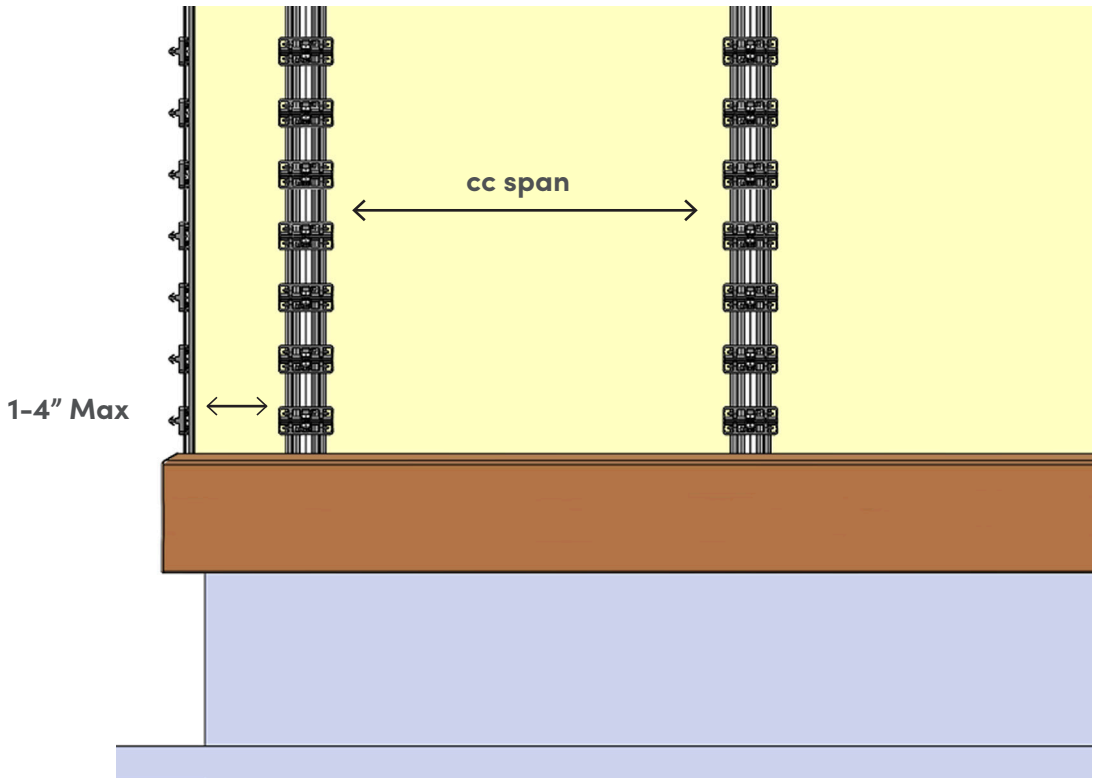

9. Use a manual or laser level to ensure the rail is positioned straight onto the wall.
10. Secure the first rail.
11. Do not exceed a 24 inch rail span for vertical and horizontal and 16" for diagonal installations.
12. Install the other rails, ensuring that the clips are aligned. They should be perpendicular to the reference line and parallel with the other rails.

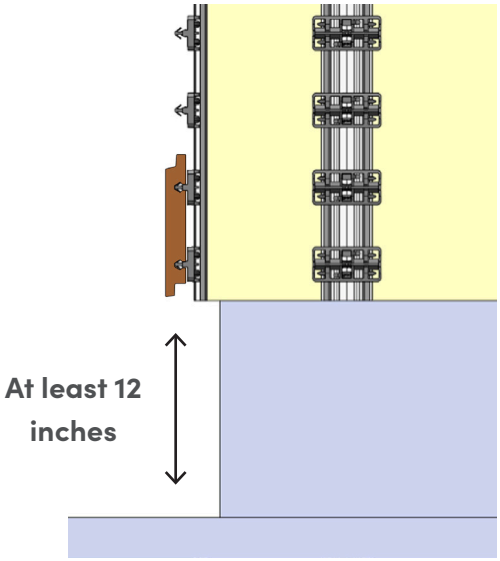

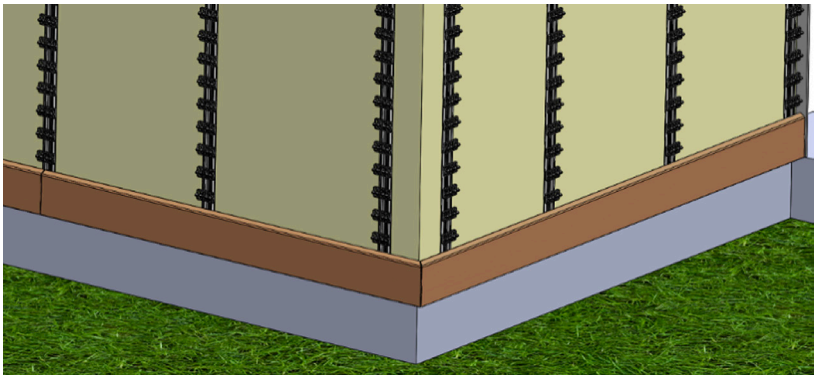

Installing the boards

1. Install the first row of cladding by pressing the first board gently onto the rail clips at the bottom of the wall – the cut edge should be at the right place on the wall extremity. You can also use a rubber mallet, but hand pressure is typically adequate. If your cladding has a more delicate finish such as Shou Sugi Ban, we recommend using hand pressure.

   Note: Boards with a double groove need to be snapped onto two clips. Narrow boards that only have a single groove need to be snapped onto one clip only.
2. Complete the row with the other boards as needed.
3. Move your way across the wall until reaching the other wall extremity.
4. Start the second row above the first one using the next set of clips.
5. For butt joints, two board ends must meet each other halfway across one clip. Typically a scarf joint is used for such applications.

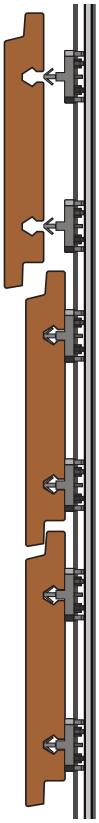

6. If the board ends do not end on a stud, you will have to take a small section of rail (often a piece of cut-off) and locate it at the junction of the two board ends. As mentioned above, it is critical that the two ends meet each other halfway across the clip.

7. Cut ends at 45-degree angles to form an overlapping joint (Scarf Joint). This is particularly important for vertical installation. The cut should slope downward from the back towards the front for vertical installations. Ensure the two board ends meet each other halfway across one set of clips. The boards at the scarf joint should be snugly butted up against each other with no gap required.

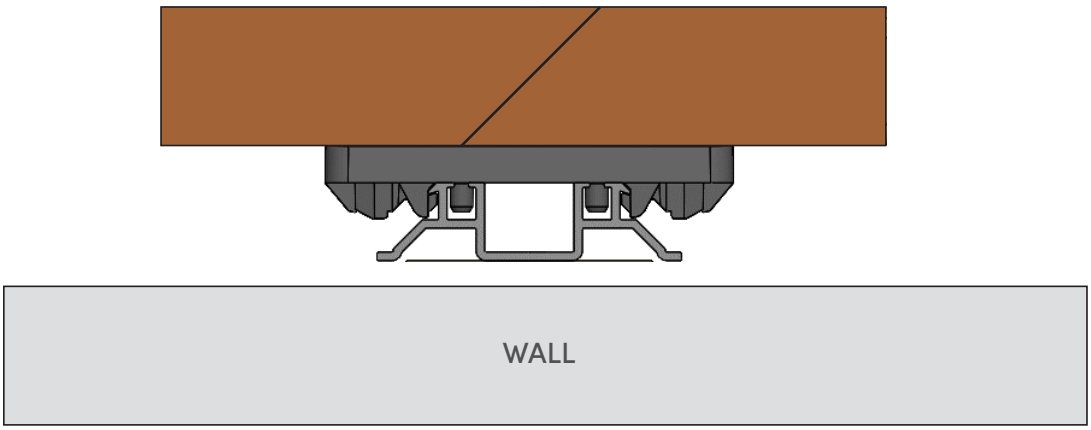

Dealing with gabled ends

When installed in gabled areas, there will be sections where a rail with standard clips will not fit. In such a situation, a Riser Support must be used. Simply snap a Riser Support onto the rail. (Note: you may need to first remove the standard clips(s) with pliers). Once installed and the board is put in place, you will need to secure the board to the Riser Support through the face of the board with a screw. We recommend that you use the Kebony Pro Plug System to ensure that the fastener is hidden.

If you encounter a situation where there is no rail but yet you need a Riser Support in that location, please do the following. Take a small section of rail (often found in your cut-off pile) and cut it to size. Clip your Riser Support in place. Then locate that small section of rail where it needs to be for proper support of the board and secure the rail to the wall. Install the board and secure the Riser Support through the face of the board as stated above.

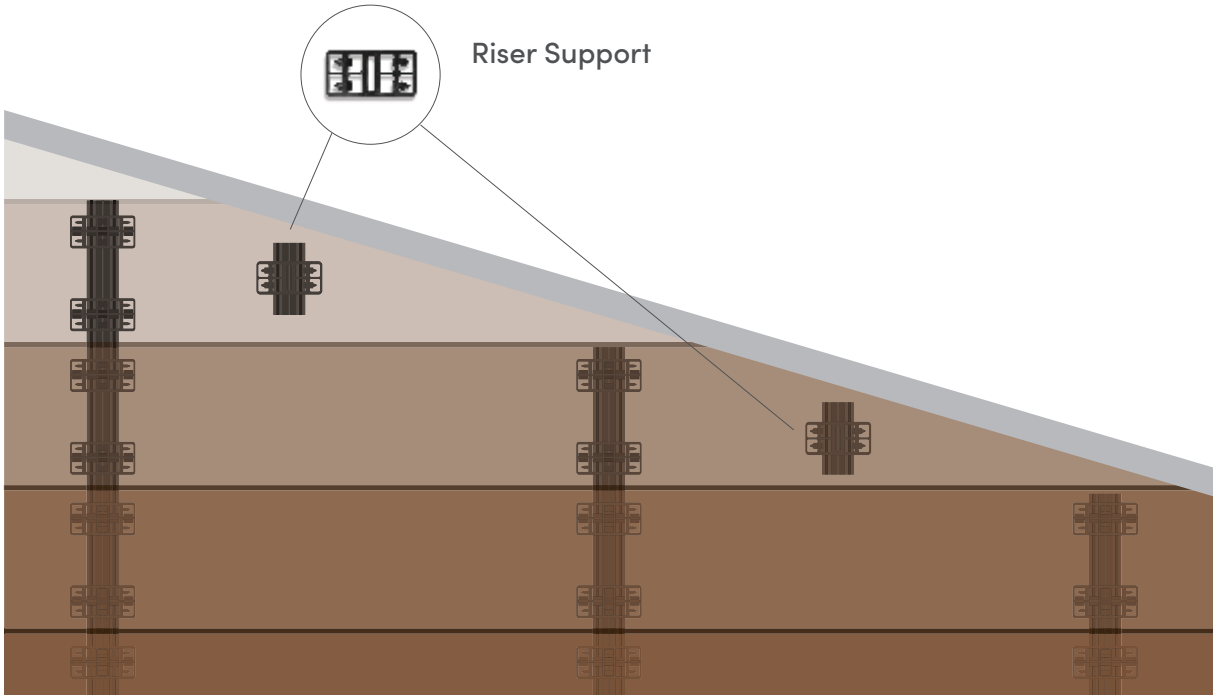

Horizontal Cladding

Ripped Boards Cut to Fit

1. When the wall cannot be finished with a full-face board, such as is common with top boards, they need to be ripped to fit. In such a case there may be only one or no usable grooves left at all.
2. To secure this board properly, remove the full clip from the rail where there is no longer a groove. Then clip one Riser Support onto the rail.

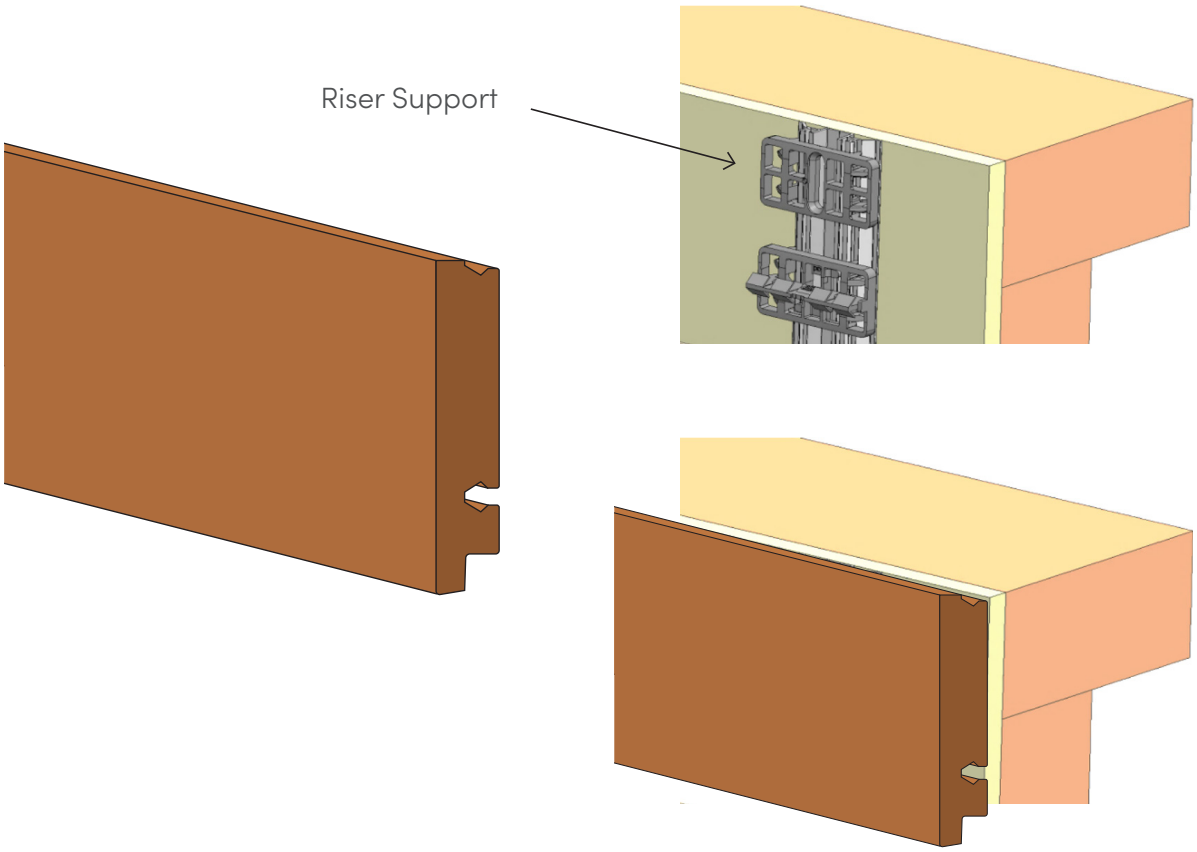

3. Snap the board on top of the clip as described if there is one groove. In the case of no grooves, use only the Riser Support.

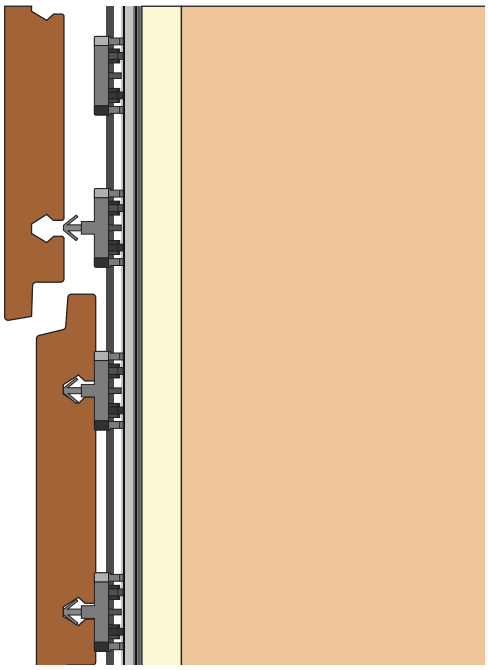

4. Secure the board by fixing it with a screw through the face of the board and the slot in the Riser Support. Use Kebony Pro Plugs to ensure that the fastener is hidden. Repeat as needed on every rail.

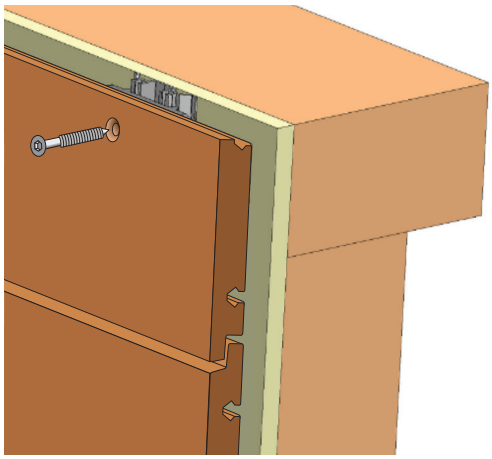

See-through view

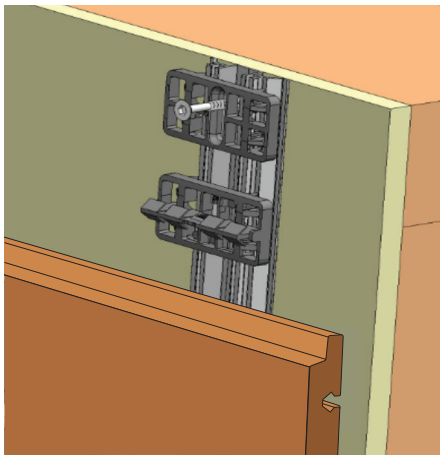

Vertical Cladding

1. All rails are symmetrical and it does not matter which end you start with
2. The rails do not need to be pre-drilled if using a pneumatic nail gun or stainless steel self-tapping screws.
3. Measure the wall width: Use full-length rails whenever possible and only cut the rails to length when necessary using the appropriate tools.
4. Always cut the rails between two clips when possible. Do not cut through the clips. Remove the clip(s) with pliers and then cut the aluminum rail.
5. With a laser level or a string, set a reference line along the wall to ensure the clips are aligned.
6. Starting at one edge of the wall, position the first rail such that the edge of the board will end up positioned where you want it relative to the end of the wall.
7. Start at the edge of the wall and make your way across, ensuring that you secure the rails into the studs and also every 10-17 inches.
8. Do not exceed 24" spans.
9. Position the first rail at a maximum of 4" away from the wall bottom of the wall.
10. Use a manual level to ensure the rail is positioned correctly onto the wall.
11. Secure the first rail with appropriate fasteners.
12. Install the other rails, ensuring that you use the Spacing Template. The rails should be perpendicular to the reference line and parallel with the other rails, with the distance between rails not exceeding 24".
13. Kebony boards should be placed 12" above grade.

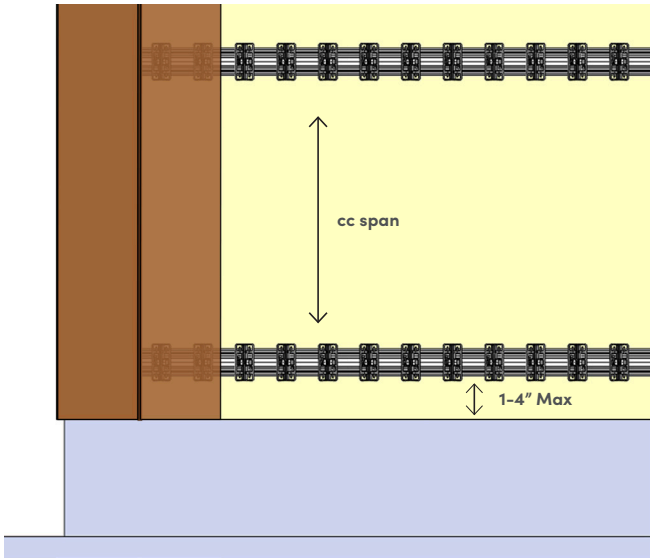

4 inches max ⟷

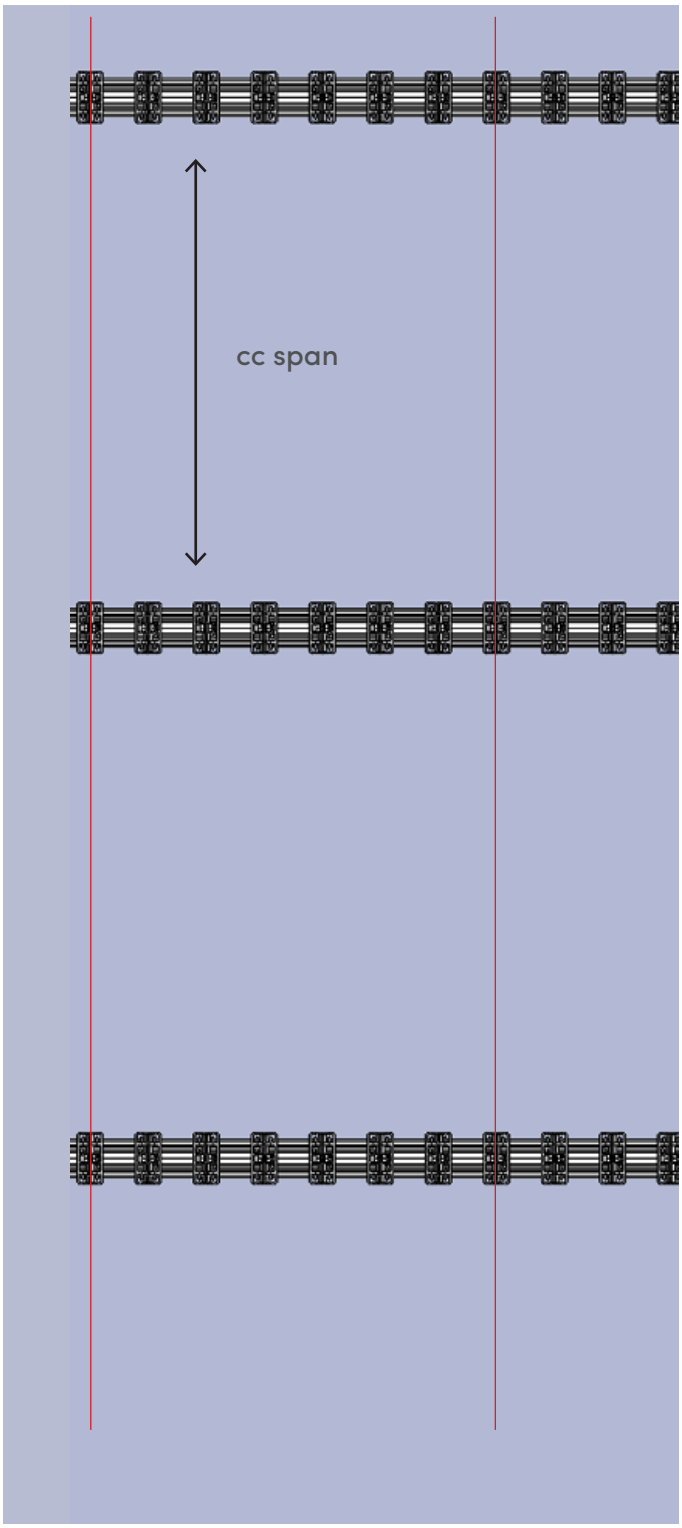

Vertical Cladding

Angle top rafter

Where full lengths of rails cannot be used, cut pieces of the rails and place them in different locations where they need to offer support for the boards being placed vertically.

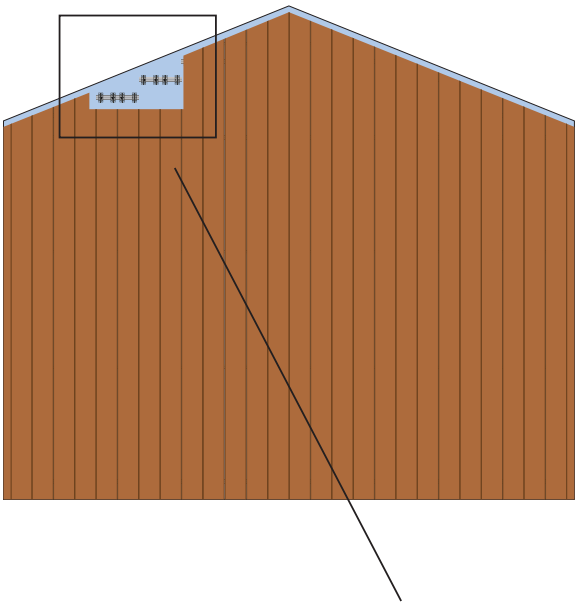

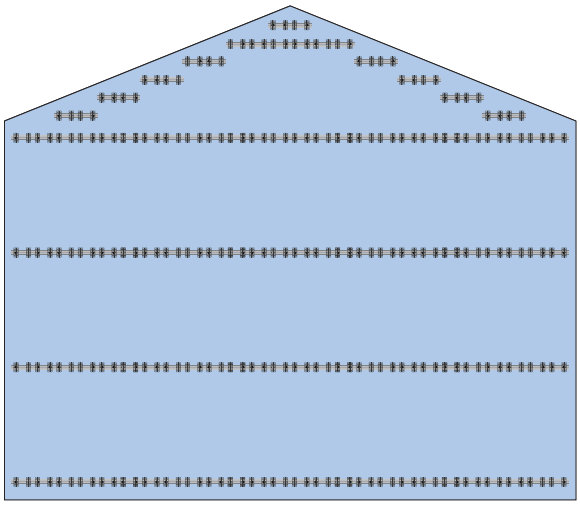

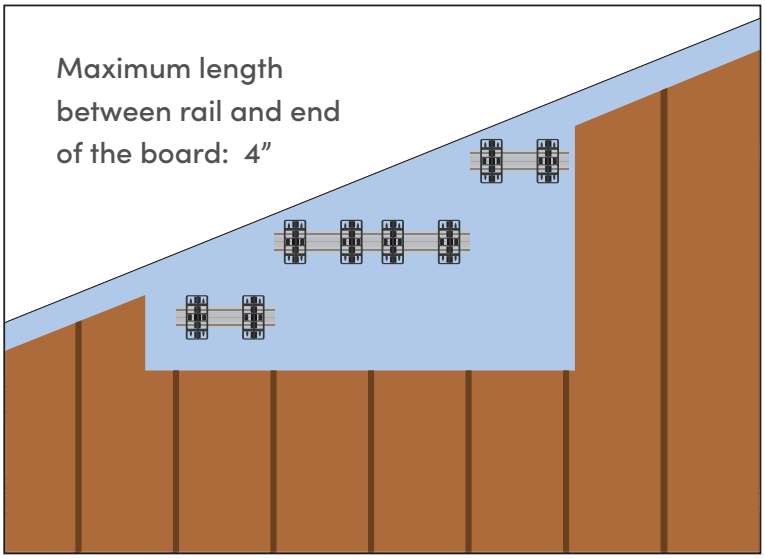

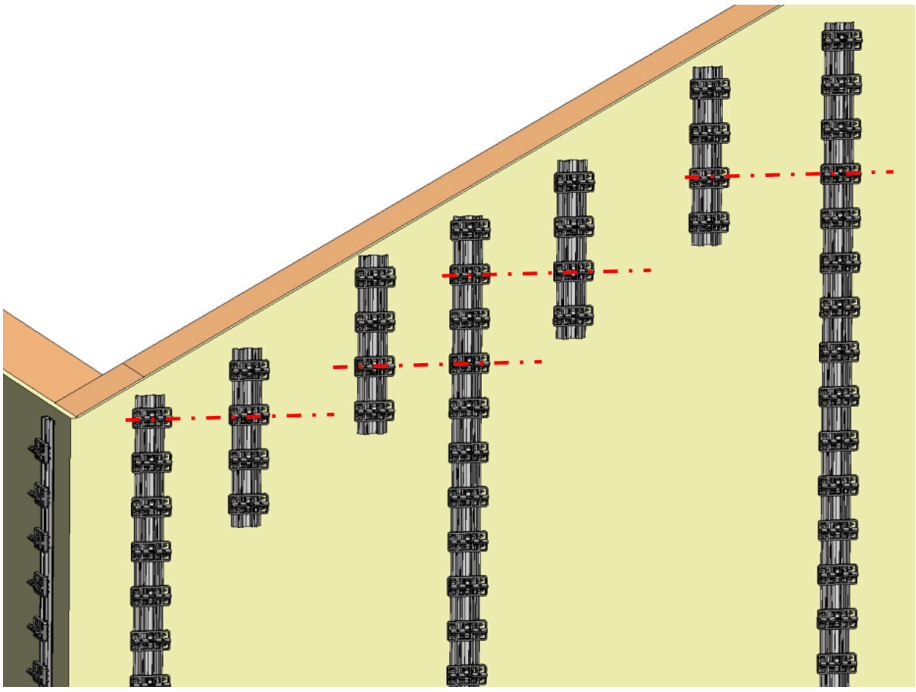

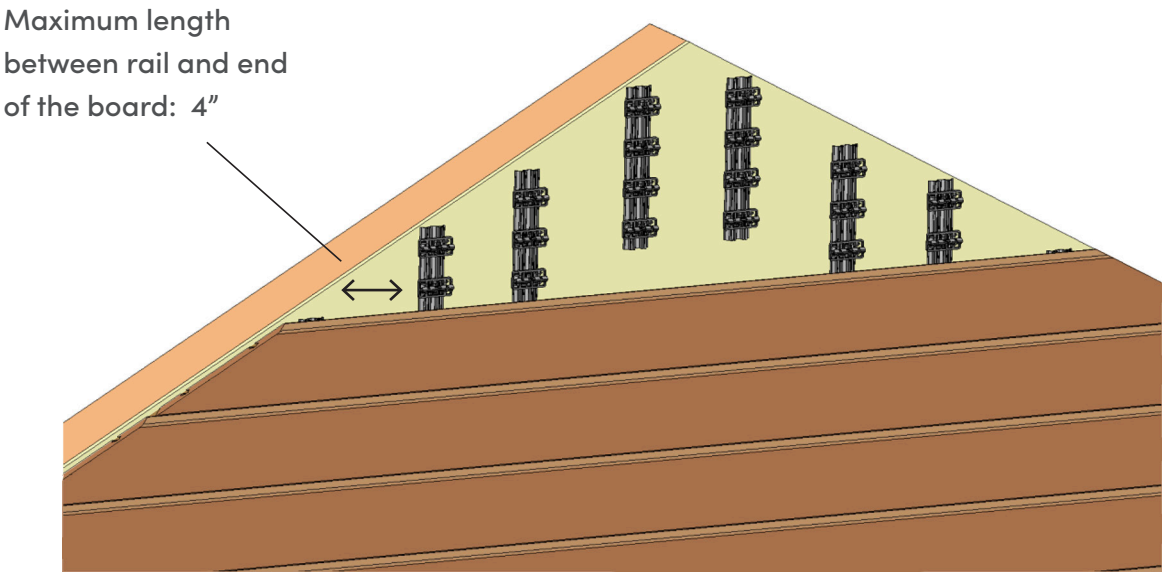
Maximum length
between rail and end
of the board: 4”

Diagnonal Cladding

1. All rails are symmetrical and it does not matter which end you start with.
2. The rails do not need to be pre-drilled if using a pneumatic nail gun or stainless steel self-tapping screws.
3. Measure the wall: Use full-length rails whenever possible and only cut the rails to length when necessary using the appropriate tools.
4. Always cut the rails between two clips when possible. Do not cut through the clips. Remove the clip(s) with pliers and then cut the aluminum rail.
5. With a laser level or a string, set a reference line along the wall to ensure the clips are aligned.
6. Kebony boards should be placed 12" above grade.
7. Install on 16" O.C. studs.
8. Install rails directly onto studs and at least one nail into sheathing between studs.
9. Use a level to ensure the rail is properly positioned onto the wall.
10. Secure the first rail.
11. Install the other rails, ensuring that the clips are aligned and also using the spacing template for inline rails. The rails should be perpendicular to the reference line and parallel with the other rails.
12. Install the rails and place a Riser Support at the end of each run.

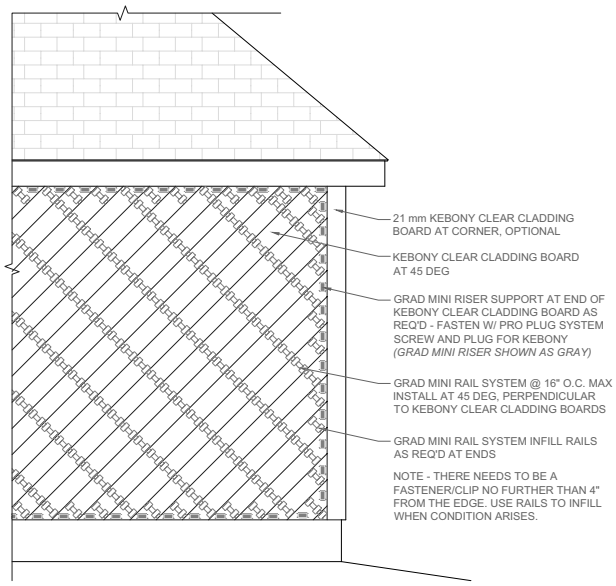

Removing a Board

Use a circular saw set to 5/16" depth (no more than that).

Run the saw lengthwise along the board on top of the clips. There are two lines of clips per board (two grooves).
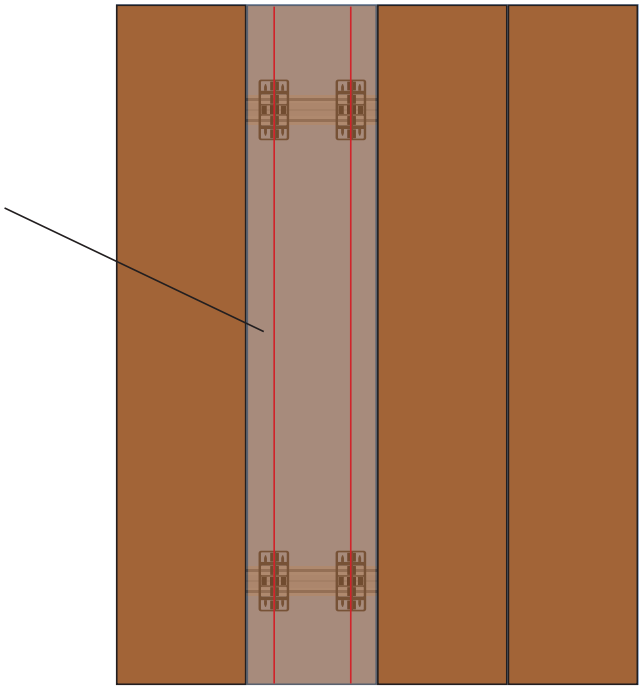
Once the board has these two lengthwise cuts in it, the board can easily be snapped/broken by hand and then the pieces removed.